REVISION		
REV	DESCRIPTION	DATE

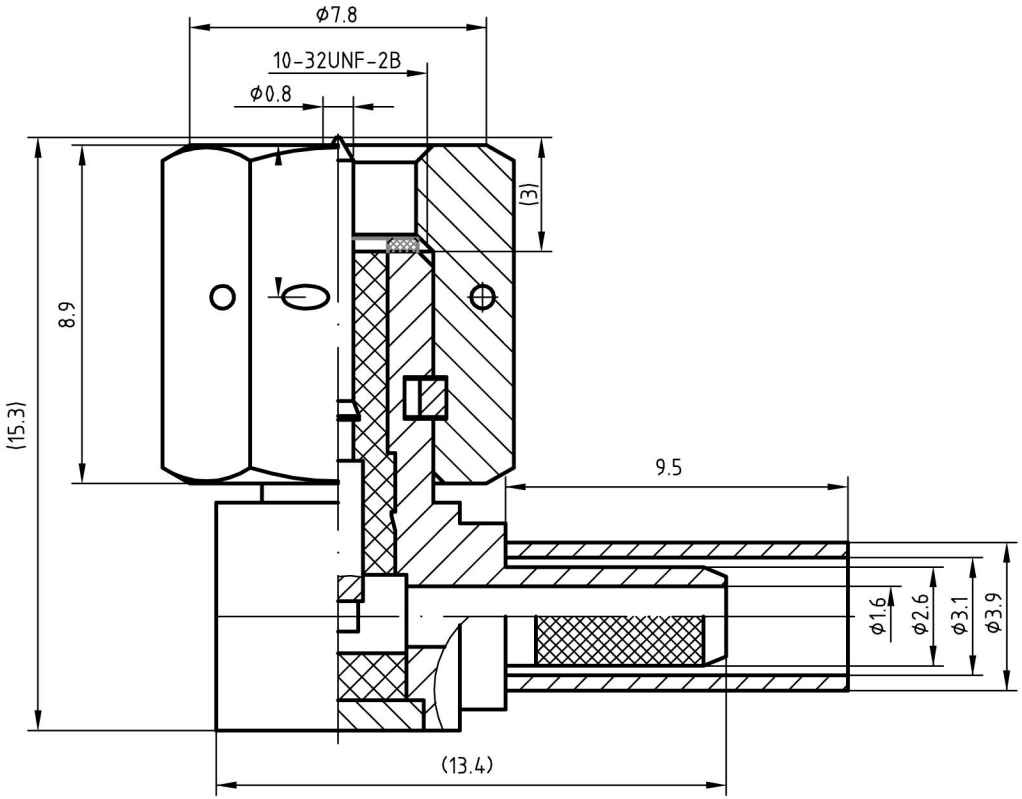

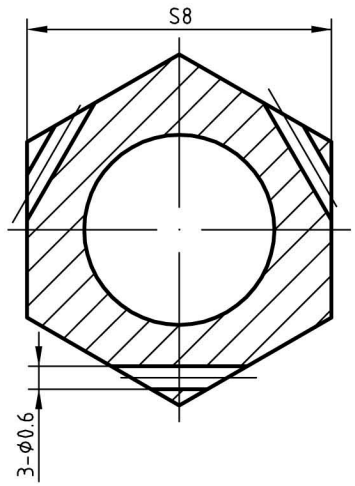

RoHS Compliance

NO.	DESCRIPTION	Q'TY	MATERIAL	PLATING	REMARKS
6	CRIMP FERRULE	1	BRASS	Nickel Plate	
5	WASHER	1	BERYLLIUM COPPER	Nickel Plate	
4	NUT	1	BRASS	Gold Plate	
3	INSULATOR	1	TEFLON		
2	CONTACT	1	BRASS	Gold Plate	
1	BODY	2	BRASS	Gold Plate	

CUSTOMER	DATE	Mar. 4, 21	MilSpecWest, LLC
	APPROVED BY	KGN	TITLE
CUSTOMER CODE	CHECKED BY	JDV	MSW - CX1032(M) - JW3-1
	DRAWN BY	AFP	DWG NO.
	SCALE 5/1	UNIT mm / WEIGHT —	A4 SHEET